SPECIFICATION APPLIED

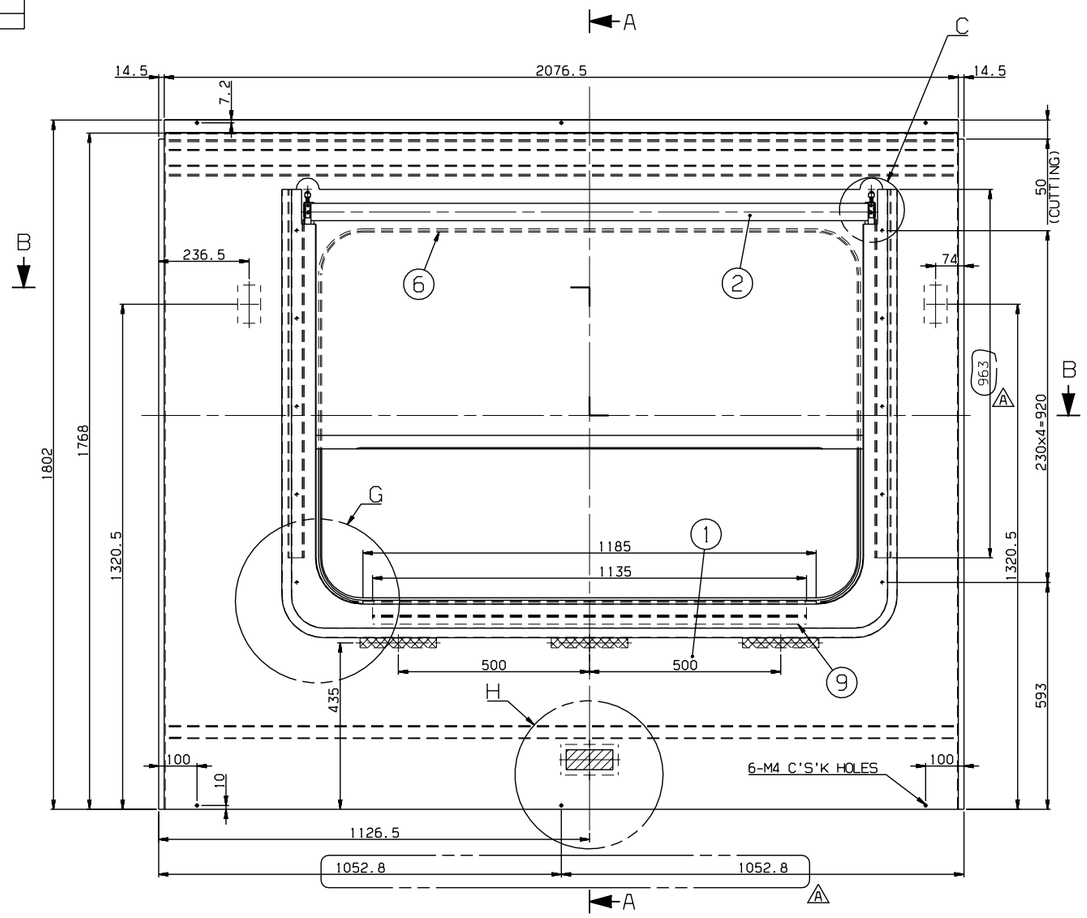

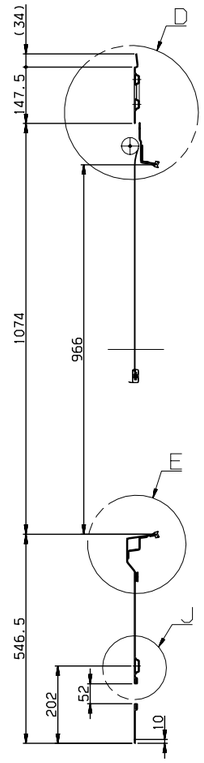

SECTION A-A

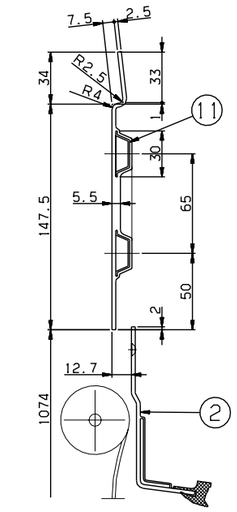

DETAIL D
SCALE=1/2

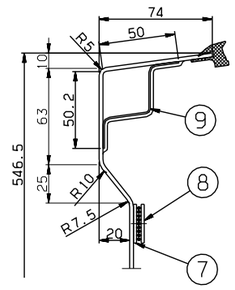

DETAIL E
SCALE=1/2

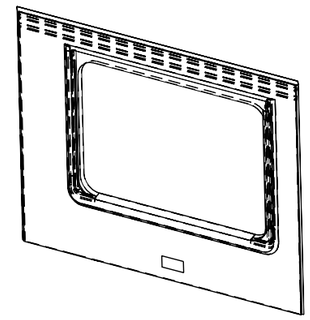

ISO VIEW

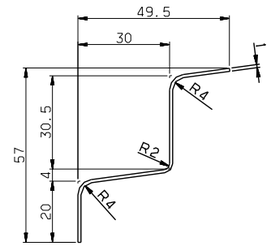

DETAIL #9
SCALE=1/1

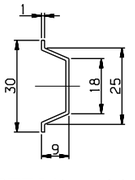

DETAIL #11
SCALE=1/1

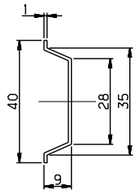

DETAIL #10
SCALE=1/1

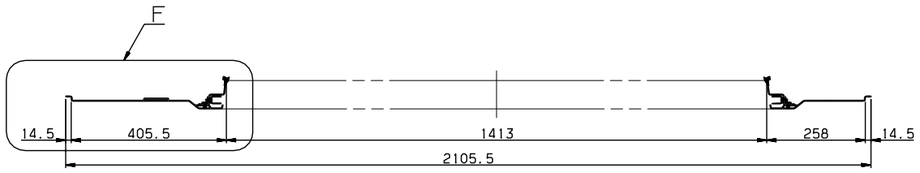

SECTION B-B

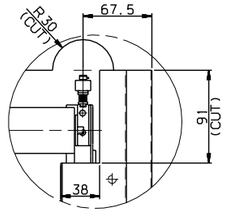

DETAIL C
SCALE=1/3

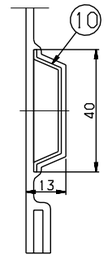

DETAIL J
SCALE=1/1

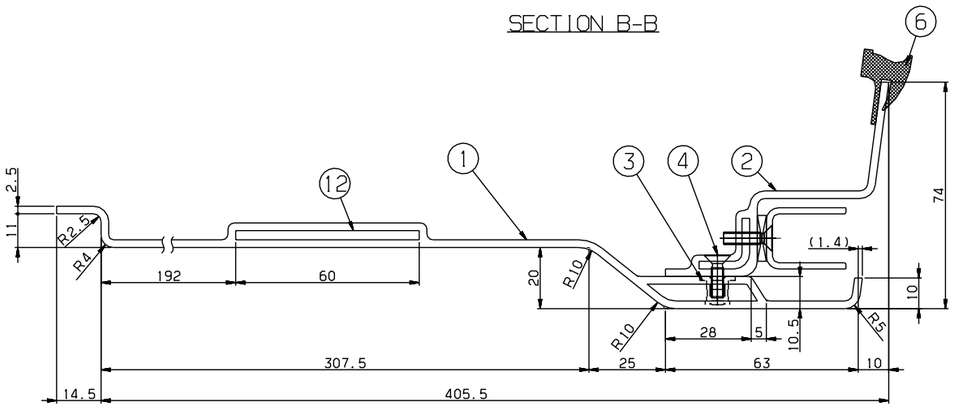

DETAIL F
SCALE=1/1

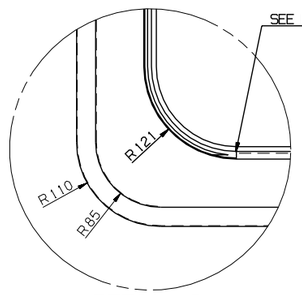

DETAIL G
SCALE=1/4

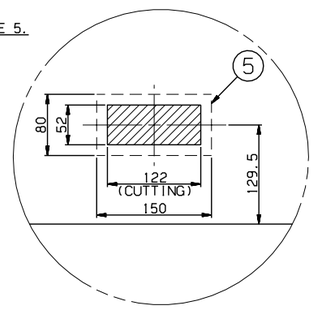

DETAIL H
SCALE=1/4

NOTE

1. AN INTERIOR PANEL'S COLOR(RAL 7047) AND SURFACE SHALL BE MANUFACTURED AFTER SAMPLE'S APPROVAL BY CUSTOMER
2. PART 6 SHALL BE CUT ADEQUATELY AND USED
3. PART 2 SHALL BE WELL OPERATED UNDER CONDITION OF ASSEMBLY
4. PART 7 SHALL BE FIXED ON THE PART 1, AND PART 8 SHALL BE DELIVERED SEPERATETLY
5. THE INTERFACE BETWEEN PART 1 AND PART 2 SHALL BE STRONGLY SEALED
6. PART 4 SHOULD BE APPLIED WITH PART 13.

일반공차 GENERAL TOLERANCE			
주조 CASTING	~ 40	2	4
	~ 30	2	3
	~ 10	1	1.5
용접 WELDING	< 3	0.5	1
절삭 MACHINING	~3150	-	7
	~1600	4	5
	~800	3	4
	~400	2	3
	~200	1.5	2
	~100	1	1.5
등급 GRADE		A	B
주강, 주철품 CASTING (±)	~20M	8	14
	~15M	7	12
	~12M	6	10
	~8M	5	8
	~4M	4	6
	~2M	3	4
	~1M	2	3
	~315	1	2
	~120	1	2
	~30	1	1
등급 GRADE		A	B
용접 구조물 WELDING (±)	~20M	-	6.0
	~15M	-	5.0
	~12M	-	4.0
	~8M	-	3.0
	~4M	0.8	2.0
	~2M	0.5	1.2
	~1M	0.3	0.8
	~315	0.2	0.5
	~120	0.15	0.3
	~30	0.1	0.2
	3~6	0.05	0.1
등급 GRADE		A	B
기계 가공품 MACHINING (±)			

NO.	PART NO.	DESCRIPTION	MATERIAL	Q'TY	V.T	REMARKS
13	CP910004-406	ADHESIVE	ASSY	1		LOCTITE 242
12	RFP51124EJ0-012	SEAT,TAP	SUS304	2		PL T3x100x60
11	RFP51124EJ0-011	STIFFENER	A1050P	2		T1
10	RFP51124EJ0-010	STIFFENER	A1050P	1		T1
9	RFP51124EJ0-009	STIFFENER	SUS304	1		T1,L=1335
8	RFP51124EJ0-008	DUAL_LOCK,FASTENER	ASSY	3		3M,SJ-3550 L=200(DUAL TAPE)
7	RFP51124EJ0-007	DUAL_LOCK,FASTENER	ASSY	3		3M,SJ-3551 L=200(DUAL TAPE)
6	RFP51124EJ0-006	RUBBER,SECTION	ASSY	1		RFP51011AN0,L=4600
5	RFP51124EJ0-005	SEAT,TAP	SUS304	1		PL T3x150x80
4	RS60607-098S	SCREW,F.H	SUS304	10		M4x14
3	RFP51124EJ0-003	NUTSERT	SUS304	10		M4
2	RFP51009AN0	PANEL,BLIND WINDOW	ASSY	1		
1	RFP51124EJ0-001	PANEL	FRP	1		T2.5

승인 APP	JeongYul Lee 2014.10.14	재질 MAT'L	ASSY
검토 CHK	KeongBong Park 2014.10.14	중량 G.W	
설계 DGN	HeonUk Lee 2014.10.14	척도 SCALE	1/8
제도 DRG	HeeSook Jeong 2014.10.14	시트 SHEET	1 of 1

TITLE: WINDOW,MASK,TYPE S

도면 번호 DRG. NO: RFP51124EJ0 MS | Ver. 00 Rev. -A

일반공차	MC	VD	CT
	B	B	B

SIZE A1

RSD1402 | RFP- | 넌-PRJT | 심리번호 CATIA

기호 MARK	일자 DATE	변경 내역 DETAIL OF REVISION(E.C ZONE)	설변번호 E.C NO.	설계 DGN	검도 CHK	승인 APP
Ax4	2014.12.18	ADDED PART NO.#13 & DIMENSION	RSD1402-U071	H.U.LEE	K.B.PARK	U.Y.LEE

참고번호 REF. NO.

본 도면은 당사 재산이므로 무단복사/배포 금지됨. PROPERTY OF ISSUING ENTITY. CANNOT BE DISTRIBUTED OR REPRODUCED WITHOUT AUTHORIZATION.